SAMSUNG

Submittal Data

AC024DNADCG/AA (CNG24ADD) / AC024DXSCCF/AA (CXF24SCD)

WindFree™* High-Wall, Single Zone, Low Ambient, Cooling Only, Split System

Job Name: _____ Location: _____

Purchaser: _____ Engineer: _____

Submitted to: _____ Reference ☐ Approval ☐ Construction ☐

Unit designation: _____ Schedule #: _____

General Information

- Low ambient cooling down to -40°F
- The indoor unit shall feature WindFree™* mode. When activated in cooling mode the unit will close its louver and will disperse air into the space through thousands of micro-holes on the front of the indoor unit preventing cold air drafts on occupants.
- The system shall have a built-in Wi-Fi adapter as standard to allow control and monitoring using the Samsung SmartThings app.
- The outdoor unit shall provide 208/230V power to the indoor unit via 14 AWG X 3 interconnect power cable.
- Interconnecting control wiring between the outdoor to indoor shall be 2-conductor/stranded copper/shielded cable between 18-16 AWG

Construction

- Outdoor unit: Galvanized steel with a baked-on powder-coated finish for durability.
- The indoor unit chassis shall be UL94 V0 with a galvanized steel mounting bracket
- All heat exchangers shall be mechanically boded aluminum fin to copper tube.
- The indoor unit shall have easy access to wire, pipe, and drain connections via the access panel on the bottom of the unit for simple installation and service

Refrigerant System

- The system shall utilize low-GWP R-32 refrigerant
- Refrigerant flow shall be controlled by an electronic expansion valve at the outdoor unit

Indoor Fan

- Three fan speed settings and auto settings
- Automatic (motorized) vertical swing (up/down) and horizontal swing (left/right) louvers

Controls

- The unit shall be operated via a wireless or wired remote control with DDC-type signal (purchased separately)
- No additional interface modules/adapters are required when connecting to Samsung central control options.
- Wired or wireless controllers must be purchased separately.

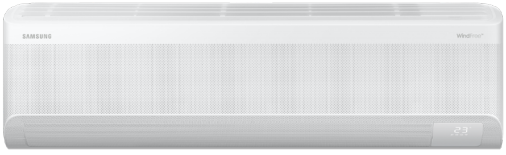

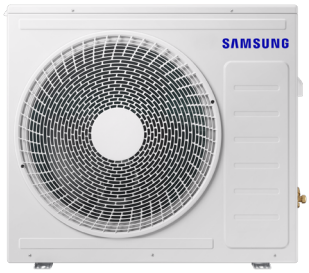

Note: Unit appearance may vary slightly

Convenience

- 7-segment digital display on the front of the unit to display temperature and unit status
- Washable main filter as standard accessible from the top of the unit
- The outdoor unit shall have a snow accumulation prevention option setting to prevent snow drifting against an idle outdoor unit.
- Emergency Temperature Output (ETO) function: when indoor unit is in error status or when room temperature exceeds a configurable temperature level, the system outputs a signal to an external source (e.g., backup system, building management system, alert device like status light, warning lamp, or buzzer).
- Maximum Current Control configurable from 50% - 100% via outdoor unit, wired controller, or central controls.

Intertek

AHRI CERTIFIED® www.ahridirectory.org Unitary Small AC AHRI Standard 210/240 Certification applies only when the complete system is listed with AHRI.

*The WindFree™ unit delivers an air current that is under 0.15 m/s while in WindFreeTM mode. Air velocity that is below 0.15 m/s is considered “still air” as defined by ASHRAE (American Society of Heating, Refrigerating, and Air Conditioning Engineers).

Samsung HVAC maintains a policy of ongoing development. Specifications are subject to change without notice. Refer to www.AHRIdirectory.org for current reference numbers.

System Specifications

Model	Indoor Unit Model Number (US Code)		AC024DNADCG/AA (CNG24ADD)
	Outdoor Unit Model Number (US Code)		AC024DXSCCF/AA (CXF24SCD)
Performance	Nominal Capacity	Cooling (Btu/h)	24,000
	Capacity Range	Cooling (Btu/h)	6,000 - 29,000
	AHRI 210-240 2023	SEER2	19.10
		EER2	9.80
Power	Voltage	ø / V / Hz	1 / 208-230 / 60
	Working Voltage Range (VAC)		187 - 253
	Operating Current (A)	Min. / Standard / Max.	1.7 / 10.9 / 15.4
	Max. Breaker	Amps	25.0
	Min. Circuit Ampacity	Amps	21.7
Dimensions	W X H X D (in.)	Indoor Unit	41 1/2 X 8 1/2 X 11 13/16
		Outdoor Unit	34 5/8 X 31 3/8 X 12 3/16
	Weight (lbs.)	Indoor Unit	28.00
		Outdoor Unit	101.40
Sound Pressure Level	Indoor Unit dB(A)	L / M / H / Turbo	30 / 35 / 39 / 44
	Outdoor Unit dB(A)	High	60
Operating Temperatures	Outdoor		23 - 122°F (-5 - 50°C)
			-40 - 122°F (-40 - 50°C) W/Baffle
	Indoor		64 ~ 90°F (16 ~ 32°C)
Pipe Connections	Indoor & Outdoor	High side (In.)	1/4
		Low side (In.)	5/8
	Maximum (ft.)		164
	Maximum Vertical Separation (ft.)		98
	Condensate Connection		11/16” OD
Refrigerant	Type		R-32
	A2L Leak Detection		Not Included
	Factory Charge	oz.	60.0
	Charged for		24.6 ft.
Compressor	Type		Inverter Driven, Twin BLDC Rotary
	RLA	Amps	14.6
Evaporator Fan	Type		BLDC motor with cross-flow fan
	Output	Watts	27
Airflow	Air Volume	CFM (L/M/H)	466 / 537 / 629
Condenser Fan	Type		BLDC With Axial Type Fan (1)
	MOC / Watts / CFM (max.)		1.2A X 1 / 125W X 1 / 2,154
Corrosion Prevention	IS0-9227 - The condenser heat exchanger showed no unusual rust or corrosion development to 2,280 hours.		
Safety	Certifications	UL 60335-2-40	
	Devices	PCB fuses, indoor unit terminal block thermal fuse, current transformer, over-voltage protection, crankcase heating, temperature limit protection logic, compressor overload sensing	

Accessories

Condensate pump	Aspen Mini Orange	☐	ASP-MO-UNIV 110-250
	Blue Diamond MaxiBlue	☐	BD-BLUE-230
Wired controller	Advanced	☐	MWR-WG01UN
	Touchscreen	☐	MWR-SH12UN
Wireless controller		☐	AR-CH01U
Thermostat adapter (for connection to standard 24VAC thermostats)		☐	MIM-A60UN
External temperature sensor		☐	MRW-TAU
External contact control interface module		☐	MIM-B14U
Wall bracket (for outdoor unit)		☐	CKN-250
Wind baffles	Front	☐	WBF-7M
	Back	☐	WBB-7M-B
Hail guard kit (includes back and side guards)		☐	HGK-2
Line set - insulated and flared, interconnect cables included	25’	☐	ILS2509
	50’	☐	ILS5009

Dimensional Drawing
AC024DNADCG/AA (CNG24ADD)

Unit: Inches

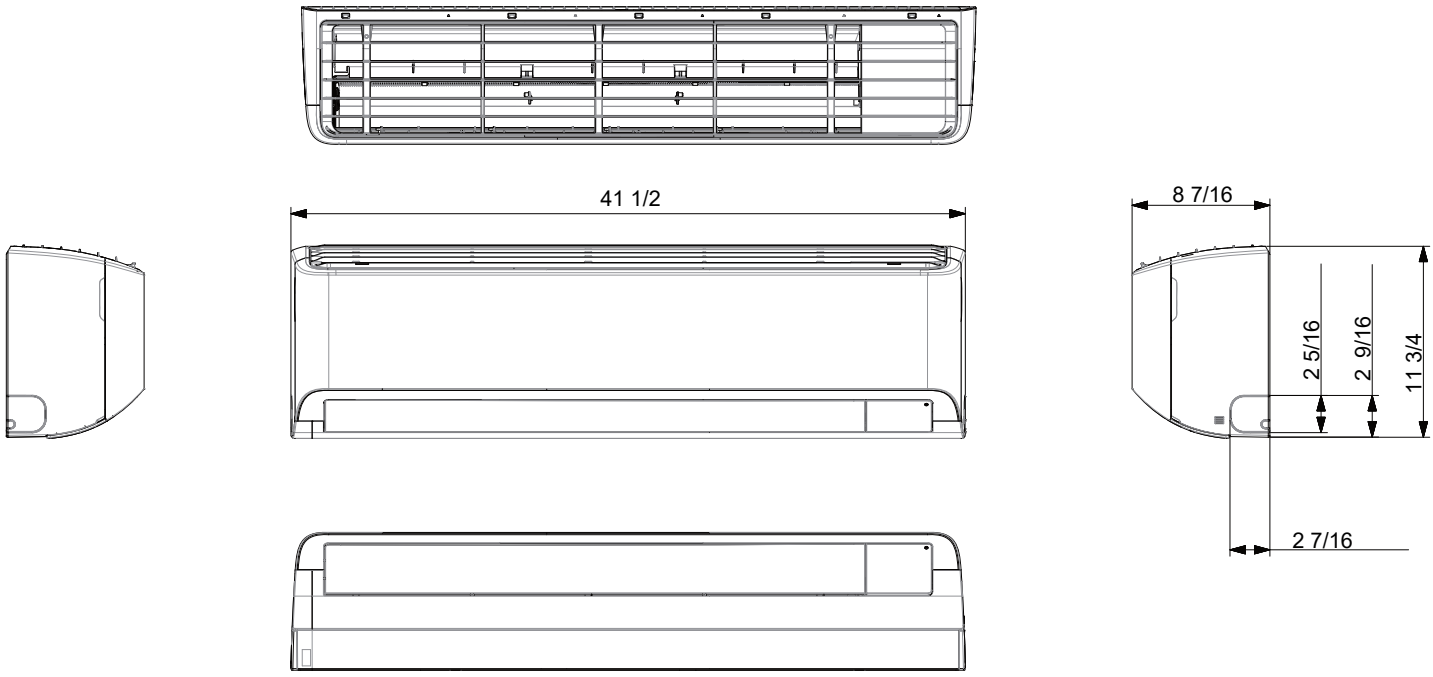

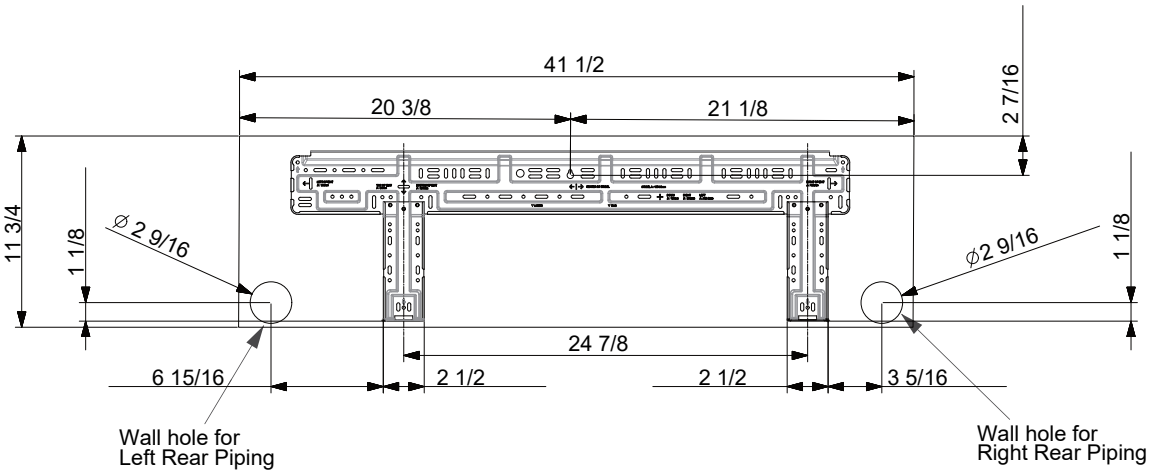

Dimensional Drawing
AC024DXSCCF/AA (CXF24SCD)
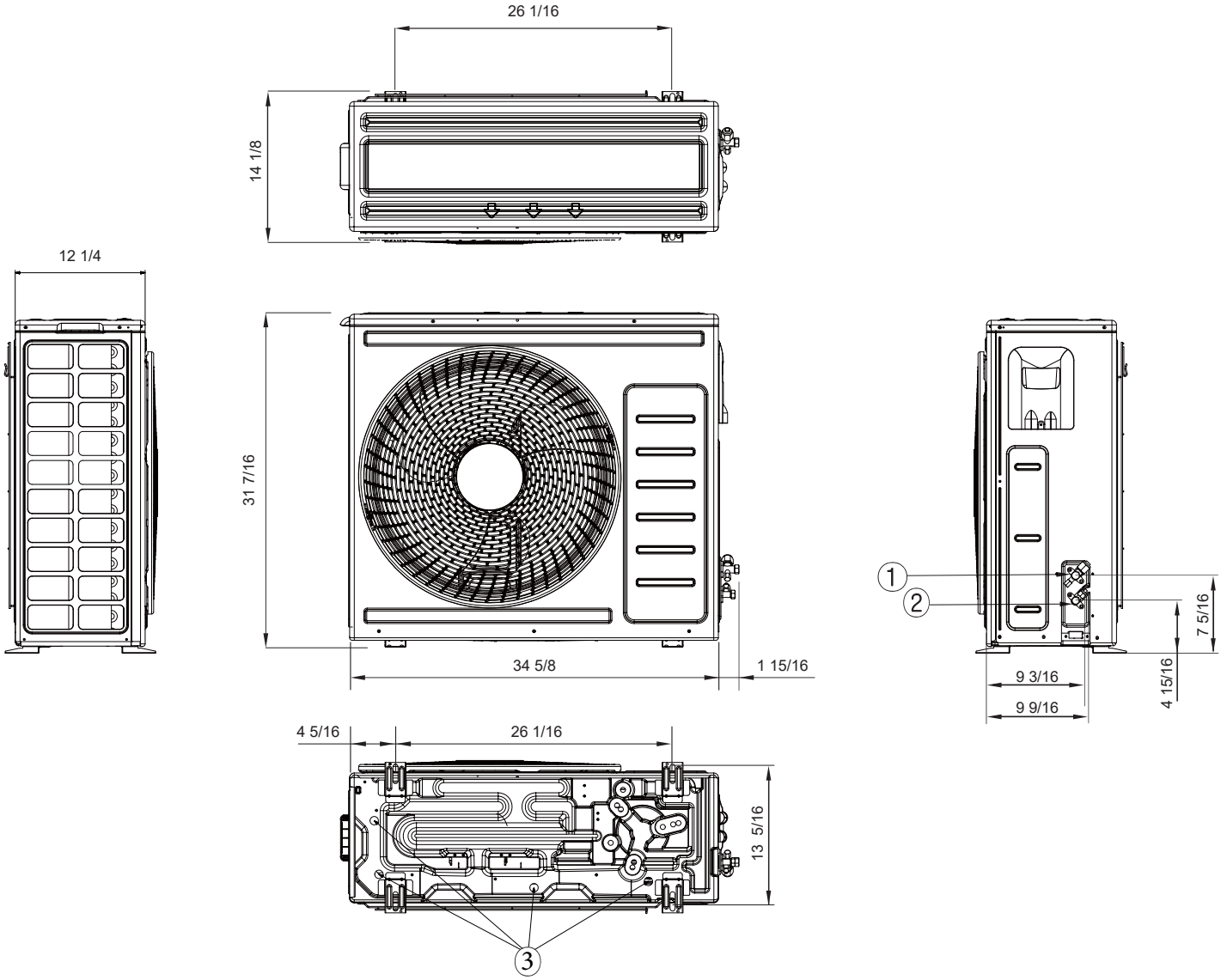
Unit: Inches