PROJECT REF:	87658-B9720
UNIT REF:	SMALL UNIT SUPPORT
FOOT PRESSURE:	N/A
UDL:	N/A

Material grade: BS EN 10219-1:2006 (S235JR). Welding standard: BS EN ISO 15614-1: 2016. Galvanizing standard: BS EN ISO 1461:2009
Reference specification document "Custom Fabrication Specification" (BF-SPEC-050411) for further information
Reference specification document "Big Foot Systems Steel Specification (BF-SPEC-230610) for further information

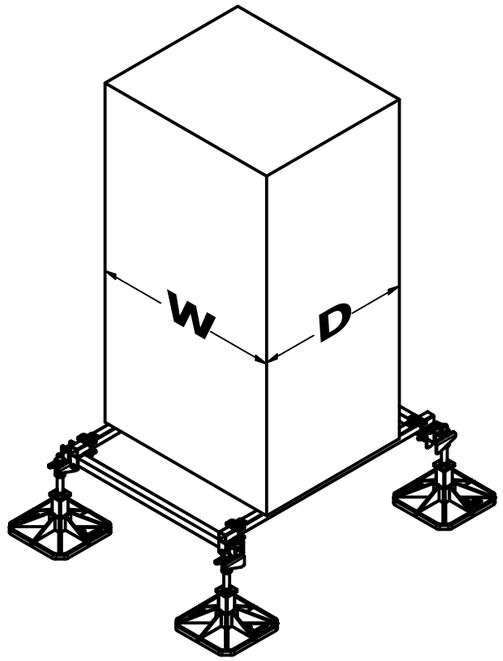

OVERALL LENGTH & WIDTH OF FRAME

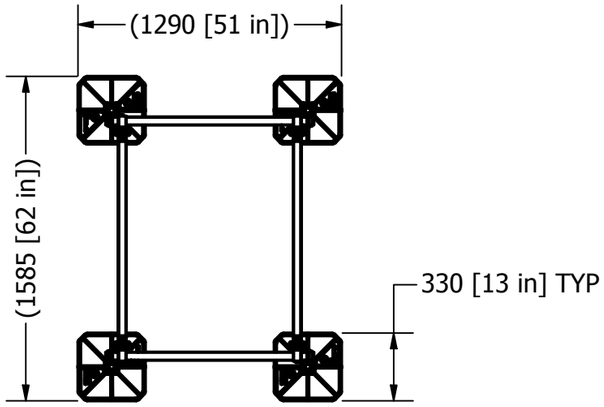

MAX UNIT DIMENSION WITH USE OF CLAMPS

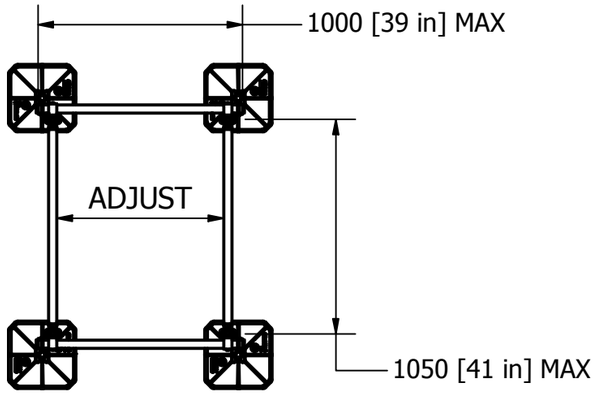

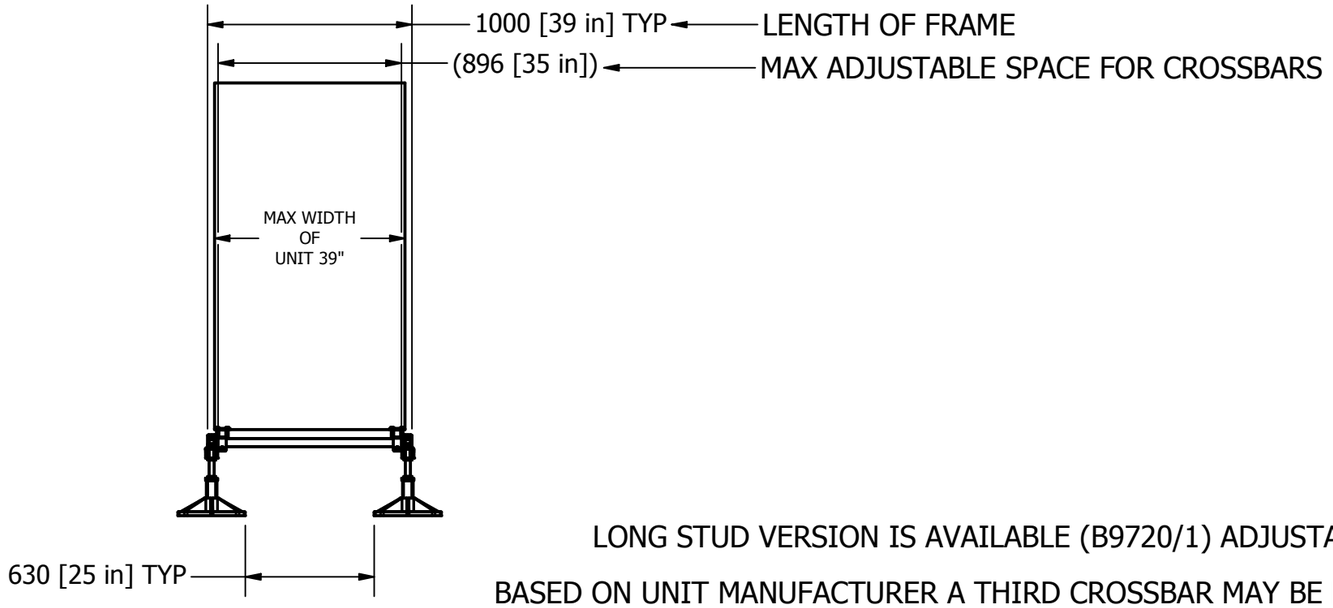

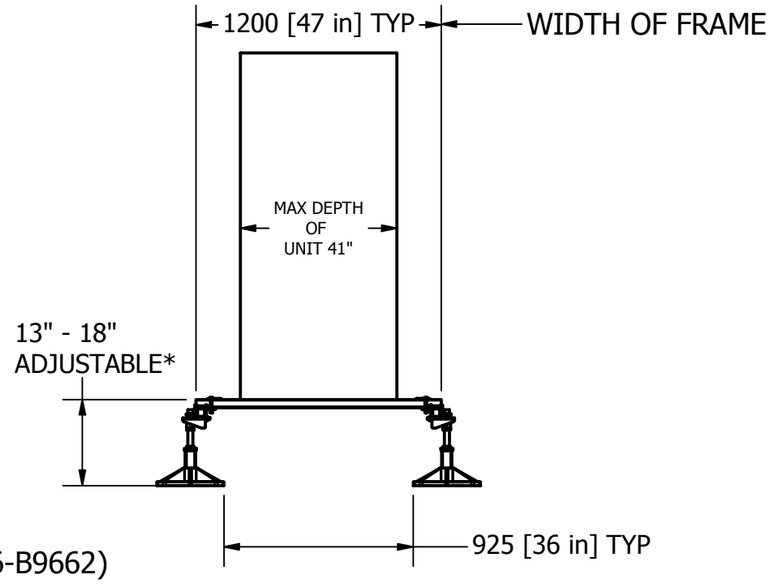

LONG STUD VERSION IS AVAILABLE (B9720/1) ADJUSTABILITY 13" - 26"

BASED ON UNIT MANUFACTURER A THIRD CROSSBAR MAY BE REQUIRED (87656-B9662)

NOTES:
ALL CROSSBARS ARE FULLY ADJUSTABLE ALONG THE LENGTH OF FRAME

***FROM FLOOR LEVEL TO TOP OF CROSSBAR**

Installation and application considerations should include health, safety and enviromental needs, regulations and standards, codes of practice, climate conditions, installation location, product orientation, evaluation of the roof structure, composition, surface and condition, ancillary and complimentary products and materials. Big Foot Systems recommend that all rooftop products are handled and installed by suitably qualified persons. All scheme designs are based on the use of Big Foot Systems' products and materials only. Terms and conditions available on request

REV	DATE:	7/3/2019
A	DRAWN:	K MABRY
	CHECKED:	

3rd ANGLE PROJECTION

SCALE: 1 : 30

DIMENSIONS IN mm U.O.S

TOLERANCES: 0.0 ± 0.5mm U.O.S

SHEET 1 OF 1

A3

TITLE: MULTI FRAME STD LEG

DWG No. B9720-001-EX.dwg

BIG FOOT® SYSTEMS